Notes:
1. Minimum PCB Clearances: 0.2mm within the net class, 1.2mm outside the net class, may be halved for inner layers.
2. Test point ground references may be at different potentials. Use with caution and avoid short circuits.

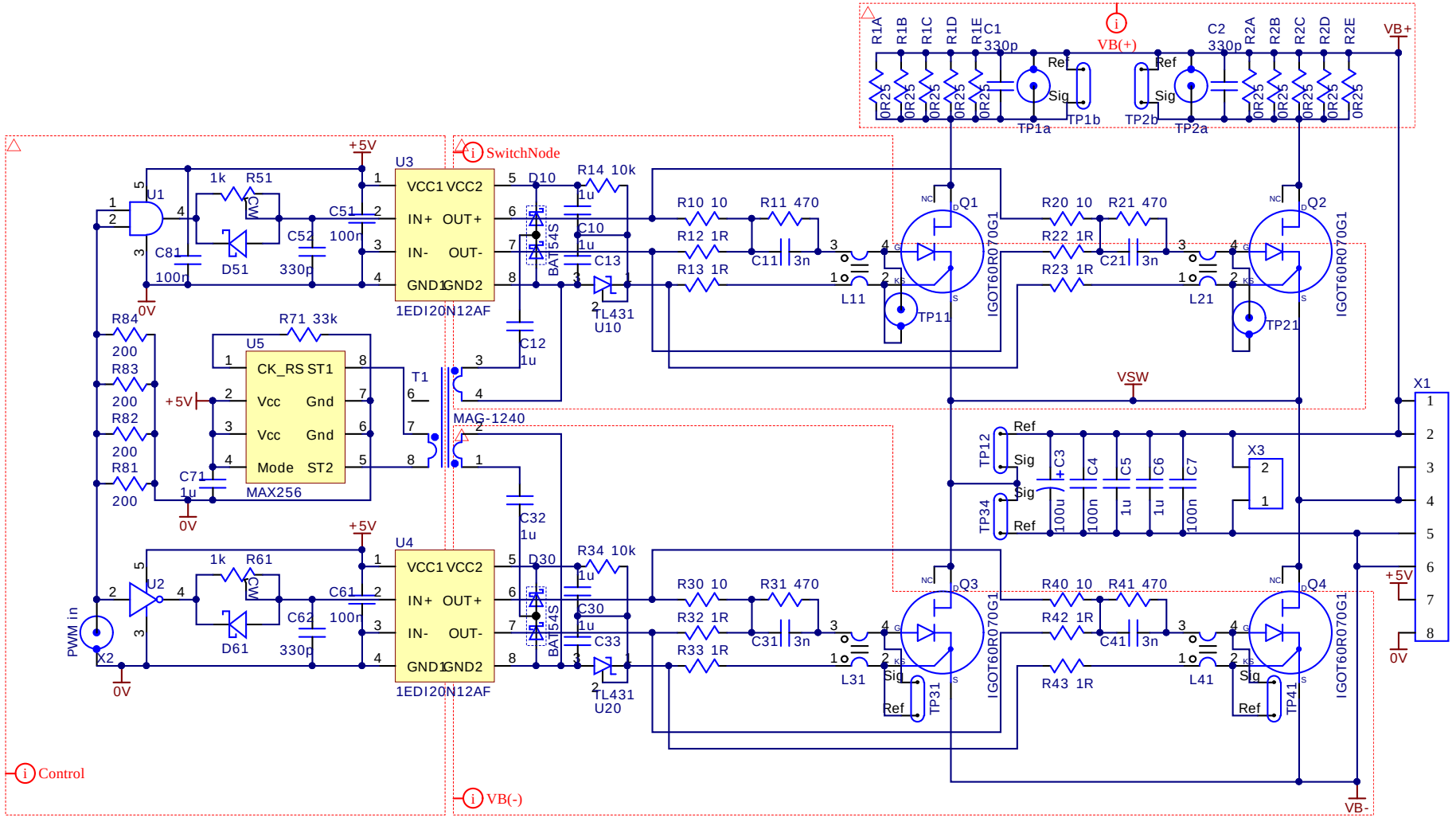

ISSUE	ECO	Date	Description
0101		XXAPR19	First release
0201		vd	L11,21,31,41, C8,9, U10,20 added, R1,2, T1 changed, TP31A,41A deleted.

Title: Parallel GaNs Board - 1EDi Compact Driver

Size	Number	Revision
A	600-001247	0201

Date: 15.10.2019 Sheet 1 of 1

File: C:\Users\..\600-001247-0201 Parallel GaNs Board 1EDi Compact Driver.SchDoc Drawn By:

Comment	Description	Designator	Footprint	LibRef	Quantity